WACHENDORFF
The Encoder Experts

Online Data sheet

Encoder WDGA 58D SSI

www.wachendorff-automation.com/wdga58dssi

Wachendorff Automation

... systems and encoders

- Complete systems
- Industrial rugged encoders to suit your application
- Standard range and customer versions
- Maximum permissible loads
- 48-hour express production
- Made in Germany
- Worldwide distributor network

IndustrieROBUST

Encoder WDGA 58D absolute SSI, with EnDra®-Technology

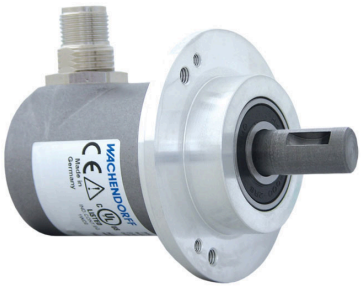

Illustration similar

EnDra® Technologie

SSI Synchronous Serial Interface

- EnDra® multiturn technology: maintenance-free and environmentally friendly
- SSI, gray or binary
- Single-turn/Multi-turn (16 bit / 43 bit)
- Forward-looking technology with 32 bit processor
- 2-colour-LED as indicator for operating condition
- High shaft load: radial and axial 500 N [50.984 kp]

www.wachendorff-automation.com/wdga58dssi

Mechanical Data	
Flange	clamping flange
Flange material	aluminum
Housing material	stainless steel
Flange diameter	Ø 58 mm [Ø 2.283"]
Cam mounting	pitch 69 mm [2.717 inches] (Accessory SP-3-00)

Shaft(s)	
Shaft material	stainless steel
Starting torque	approx. 1 Ncm [1.416 in-ozf] at ambient temperature
Shaft	Ø 12 mm [Ø 0.472"]
Shaft length	L: 25 mm [0.984"]
Max. Permissible shaft loading radial	500 N [50.984 kp]
Max. Permissible shaft loading axial	500 N [50.984 kp]

Bearings	
Bearings type	3 precision ball bearings
Nominale service life	2 x 10'8 revs. at 100 % rated shaft load 3.5 x 10'9 revs. at 40 % rated shaft load 2.5 x 10'10 revs. at 20 % rated shaft load
Max. operating speed	8000 rpm

Machinery Directive: basic data safety integrity level	
$MTTF_d$	1000 a
Mission time (TM)	20 a
Nominale service life (L10h)	2.5 x 10'10 revs. at 20 % rated shaft load and 8000 rpm
Diagnostic coverage (DC)	0 %

Electrical Data	
Power supply/Current consumption	4,75 VDC up to 32 VDC: typ. 50 mA
Power consumption	max. 0.5 W
Power supply/Current consumption	4,75 VDC up to 5,5 VDC: typ. 80 mA
Power consumption	max. 0.44 W
Operating principle	magnetic

Sensor data	
Single-turn technology	innovative hall sensor technology
Single-turn resolution	up to 65,536 steps/360° (16 bit)
Single-turn accuracy	± 0.0878° (≤ 12 bit)
Single-turn repeat accuracy	± 0.0878° (≤ 12 bit)
Internal cycle time	≤ 600 µs
Multi-turn technology	patented EnDra® technology no battery, no gear.
Multi-turn resolution	up to 43 bit.

Environmental data	
ESD (DIN EN 61000-4-2):	8 kV
Burst (DIN EN 61000-4-4):	2 kV
includes EMC:	DIN EN 61000-6-2 DIN EN 61000-6-3 DIN EN 61326-1
Vibration: (DIN EN 60068-2-6)	300 m/s² (10 Hz up to 2000 Hz)
Shock: (DIN EN 60068-2-27)	5000 m/s² (6 ms)
Electrial Safety:	according DIN VDE 0160
Turn on time:	<1,5 s

Duty information	
Customs tariff number:	90318020
Country of origin:	Germany

Interface	
Interface:	**SSI**
Clock input:	via opto-coupler; I > 1.6 mA; U > 2.2 V
Clock frequency:	100 kHz up to 500 kHz, up to 2 MHz on request
Data output:	RS485/RS422 compatible
Output code:	gray or binary
SSI output:	Angular-/position value
Parity bit:	optional (even/odd)
Error bit:	optional
Turn on time:	<1.5 s
Configuration inputs Positive direction of counting: (View on shaft)	DIR = GND -> cw DIR = +UB -> ccw
Set to zero:	Set: Preset = +UB for 2 s Deaktivate: Preset = GND

Transmission protocoll SSI Single transmission:

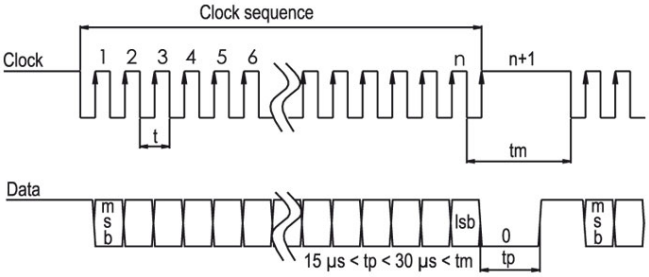

Transmission protocol SSI Multipath transmission:

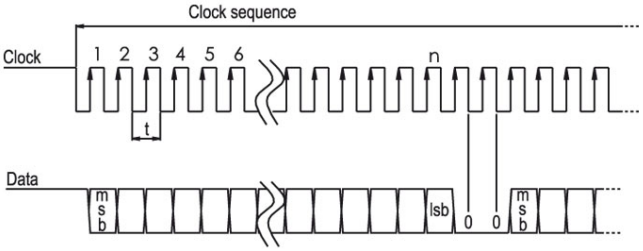

LED-behaviour:	
At Start / while booting:	- red gleam (< 2,3 s)
Malfunction:	- constant red gleam (> 2,3 s)
Normal function:	- constant green gleam
No supply:	- no gleam

General Data	
Connections	cable or connector outlet
Protection rating (EN 60529)	Housing: IP65, IP67; shaft sealed: IP65; cable outlet K1: IP40
Operating temperature	-40 °C up to +85 °C [-40 °F up to 185 °F]
Storage temperature	-40 °C up to +100 °C [-40 °F up to 212 °F]

More Information
General technical data and safety instructions **http://www.wachendorff-automation.com/gtd**
Options **http://www.wachendorff-automation.com/acc**

Cable connection, L2 axial with 2 m cable

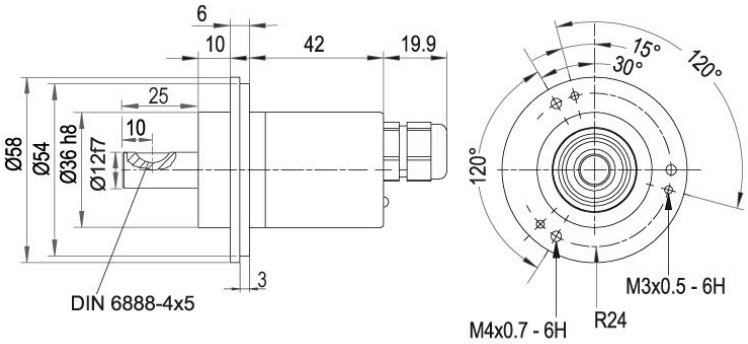

Description	
L2	axial, shield connected to encoder housing

Assignments	
	L2
GND	WH
(+) Vcc	BN
SSI CLK+	GN
SSI CLK-	YE
SSI DATA+	GY
SSI DATA-	PK
PRESET	BU
DIR	RD
Shield	housing

Cable connection, L3 radial with 2 m cable

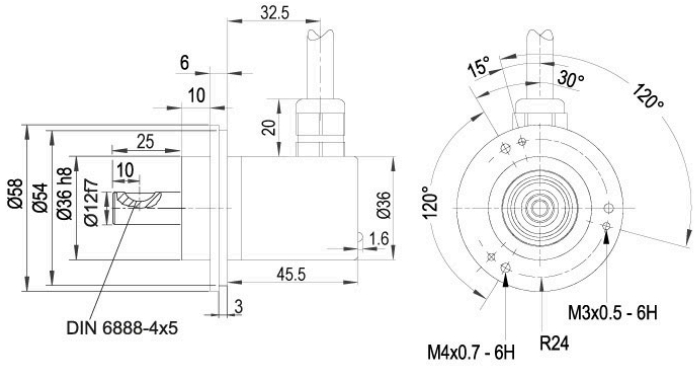

Description

L3	radial, shield connected to encoder housing

Assignments	
	L3
GND	WH
(+) Vcc	BN
SSI CLK+	GN
SSI CLK-	YE
SSI DATA+	GY
SSI DATA-	PK
PRESET	BU
DIR	RD
Shield	housing

Cable connection, K1 radial with 2 m cable (IP40)

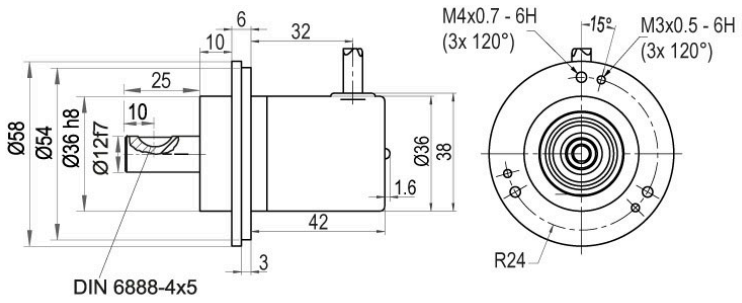

Description

K1	radial, shield not connected

Assignments	
	K1
GND	WH
(+) Vcc	BN
SSI CLK+	GN
SSI CLK-	YE
SSI DATA+	GY
SSI DATA-	PK
PRESET	BU
DIR	RD
Shield	housing n. c.

Connector, M12x1, CB8, axial, 8-pin

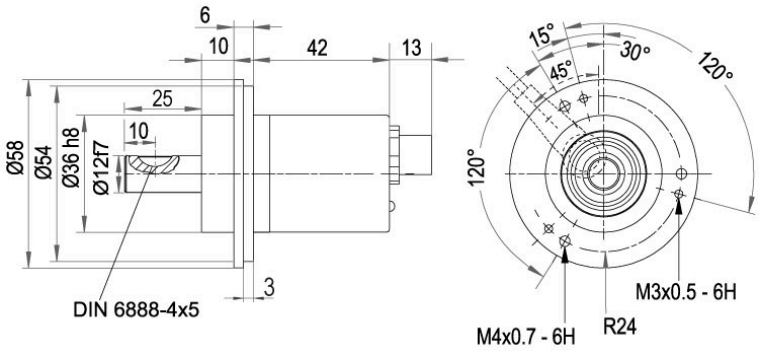

Description

CB8 axial, 8-pin, shield connected to encoder housing

Assignments	
	CB8
	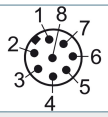
GND	1
(+) Vcc	2
SSI CLK+	3
SSI CLK-	4
SSI DATA+	5
SSI DATA-	6
PRESET	7
DIR	8
Shield	housing

Connector, M12x1, CC8, radial, 8-pin

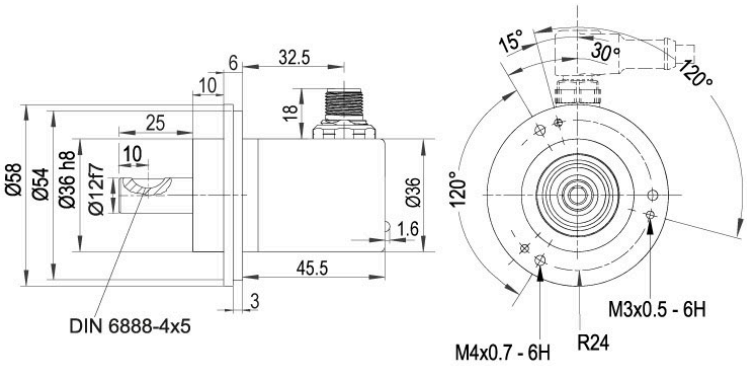

Description

CC8 radial, 8-pin, shield connected to encoder housing

Assignments	
	CC8
	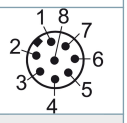
GND	1
(+) Vcc	2
SSI CLK+	3
SSI CLK-	4
SSI DATA+	5
SSI DATA-	6
PRESET	7
DIR	8
Shield	housing

Options

Low-friction bearings	Order key
The encoder WDGA 58D SSI is also available as a particularly smooth-running low-friction encoder. The starting torque is thereby changed to ≤ 0.5 Ncm [0.708 in-ozf] and the protection class at the shaft input to IP50.	**AAC**

Example Order No.	Type		Your encoder
WDGA 58D	WDGA 58D		WDGA 58D
	Shaft	**Order key**	
12	Ø 12 mm [Ø 0.472"]	12	
	Single-turn Resolution	**Order key**	
12	Single-turn resolution 1 bit up to 16 bit, recommended min. 6 bit (e. G. 12 bit)	12	
	Multi-turn Resolution	**Order key**	
12	Multi-turn up to 43 bit (e. G. 12 bit) No Multi-turn = 00	12	
	Data protocol	**Order key**	
SI	SSI	SI	
	Software	**Order key**	
A	up to date release	A	
	Code	**Order key**	
B	binary	B	
	gray	G	
	Power supply	**Order key**	
0	4.75 V up to 32 V (standard)	0	
	4.75 V up to 5.5 V	1	
	Galvanic isolation	**Order key**	
1	yes	1	
	Electrical connections	**Order key**	
CB8	**Cable:**		
	axial, shield connected to encoder housing, with 2 m cable	L2	
	radial, shield connected to encoder housing, with 2 m cable	L3	
	radial, shield not connected, with 2 m cable, IP40	K1	
	Connector:		
	sensor-connector, M12x1, 8-pin, axial, shield connected to encoder housing	CB8	
	sensor-connector, M12x1, 8-pin, radial, shield connected to encoder housing	CC8	
	Options	**Order key**	
	Without option	Empty	
	Low-friction bearings	AAC	

Example Order No.	WDGA 58D	12	12	12	SI	A	B	0	1	CB8	
	WDGA 58D											Example Order No.

For further information please contact our local distributor.
Here you find a list of our distributors worldwide.
https://www.wachendorff-automation.com/contact-en/wachendorff-world-wide/

Wachendorff Automation GmbH & Co. KG
Industriestrasse 7 • 65366 Geisenheim
Germany

Phone: +49 67 22 / 99 65 25
E-Mail: wdg@wachendorff.de
www.wachendorff-automation.de