Encoder WDGA 58A CANopen LIFT galv. isolation

www.wachendorff-automation.com/wdga58acanliftgalv

Wachendorff Automation

... systems and encoders

- Complete systems
- Industrial rugged encoders to suit your application
- Standard range and customer versions
- Maximum permissible loads
- 48-hour express production
- Made in Germany
- Worldwide distributor network

IndustrieROBUST

Encoder WDGA 58A absolute CANopen LIFT galv. isolation, magnetic, with EnDra®- Technology

EnDra® Technologie

CANopen LIFT

- EnDra®: maintenance-free and environmentally friendly
- CANopen LIFT, Single-turn and Multi-turn
- Galvanic isolaltion
- Communication Profile according to CiA 301
- Application Profile CANopen LIFT CiA 417
- Single-turn/Multi-turn (16 bit/32 bit)
- Forward-looking technology with 32 Bit processor
- 2-colour-LED as indicator for operating condition and error message appropriate CiA 303-3
- High shaft load up to 220 N radial, 120 N axial

www.wachendorff-automation.com/wdga58acanliftgalv

Mechanical Data	
Housing	
Flange	synchro flange
Flange material	aluminum
Housing cap	steel case chrome-plated, magnetic shielding
Housing	Ø 58 mm
Shaft(s)	
Shaft material	stainless steel
Starting torque	approx. 1 Ncm at ambient temperature, approx. 1.416 in-ozf at ambient temperature
Shaft	Ø 6 mm
Advice	Attention: No option AAO = full IP67 version
Shaft length	L: 12 mm
Max. Permissible shaft loading radial	125 N
Max. Permissible shaft loading axial	120 N
Shaft	Ø 8 mm
Advice	Attention: No option AAO = full IP67 version
Shaft length	L: 19 mm
Max. Permissible shaft loading radial	125 N
Max. Permissible shaft loading axial	120 N
Shaft	Ø 10 mm
Shaft length	L: 20 mm
Max. Permissible shaft loading radial	220 N
Max. Permissible shaft loading axial	120 N
Shaft	Ø 9.525 mm, Ø 3/8"
Advice	Attention: No option AAO = full IP67 version
Shaft length	L: 20 mm, L: 0.787 in
Max. Permissible shaft loading radial	220 N, 22.434 kp
Max. Permissible shaft loading axial	120 N, 12.237 kp
Bearings	
Bearings type	2 precision ball bearings

Nominale service life	1 x 10'9 revs. at 100 % rated shaft load 1 x 10'10 revs. at 40 % rated shaft load 1 x 10'11 revs. at 20 % rated shaft load
Max. operating speed	8000 rpm

Electrical Data	
Power supply/Current consumption	10 VDC up to 32 VDC: typ. 100 mA
Power consumption	max. 1 W

Sensor data	
Single-turn technology	innovative hall sensor technology
Single-turn resolution	65,536 steps/360° (16 bit)
Single-turn accuracy	± 0.0878° (≤ 12 bit)
Single-turn repeat accuracy	± 0.0878° (≤ 12 bit)
Internal cycle time	≤ 600 µs
Multi-turn technology	patented EnDra® technology no battery and no gear.
Multi-turn resolution	up to 32 bit

Environmental data	
ESD (DIN EN 61000-4-2):	8 kV
Burst (DIN EN 61000-4-4):	2 kV
includes EMC:	DIN EN 61000-6-2 DIN EN 61000-6-3 DIN EN 61326-1
Vibration: (DIN EN 60068-2-6)	50 m/s² (10 Hz up to 2000 Hz)
Shock: (DIN EN 60068-2-27)	5000 m/s² (6 ms)
Design:	according DIN VDE 0160
Turn on time:	<1,5 s

Duty information	
Customs tariff number:	90318020
Country of origin:	Germany

Interface	
Interface:	**CAN**

Protocol:	CANopen • Communication profil CiA 301 • Application Profile CANopen LIFT CiA 417 V2.0 • Up to three virtual devices *car position unit (configurable)*
Node number:	1 up to 127 (default 4)
Baud rate:	50 kBaud up to 1 MBaud with automatic bit rate detection.
Advice:	The standard settings as well as any customization in the software can be changed via LSS (CiA 305) and the SDO protocol, e. g. PDOs, Scaling, Heartbeat, Node-ID, Baud rate, etc.
Programmable CAN transmission modes:	**Sychronous mode:** when a synchronisation telegram (SYNC) is received from another bus node, PDOs are transmitted independently. **Asynchronous mode:** a PDO message is triggered by an internal event. (e.g. change of measured valued, internal timer, etc.)

General Data	
Connections	cable or connector outlet
Protection rating (EN 60529)	Housing: IP65, IP67; shaft sealed: IP65
Operating temperature	-40 °C up to +85 °C, -40 °F up to +176 °F
Storage temperature	-40 °C up to +100 °C, -40 °F up to +212 °F

More Information
General technical data and safety instructions **http://www.wachendorff-automation.com/gtd**
Options **http://www.wachendorff-automation.com/acc**

WDGA 58A CANopen LIFT, galv. isolation, with M12x1, axial CB5, 5-pin

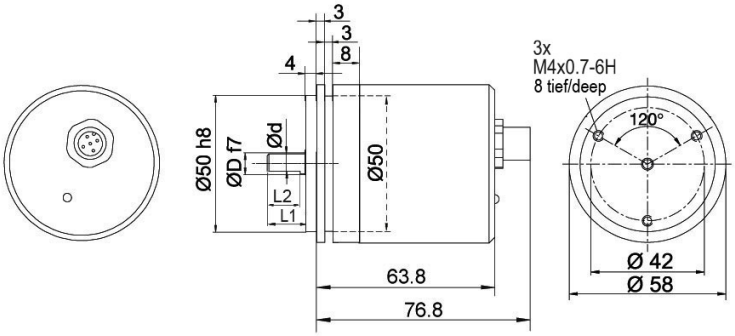

D = 6, L1 = 12, d = 5.3, L2 = 10
D = 8, L1 = 19, d = 7.5, L2 = 15
D = 10, L1 = 20, d = 9, L2 = 15
D = 3/8“, L1 = 20, d = 8.3, L2 = 10

Option AIX:
D = 6, L1 = 10, d = 5.3, L2 = 8

Description

CB5 axial, 5-pin, shield connected to encoder housing

Assignments	
	CB5
	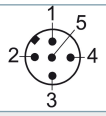
(+) Vcc	2
GND	3
CANHigh	4
CANLow	5
CANGND shield	1

WDGA 58A CANopen LIFT, galv. isolation, with M12x1, CC5, radial, 5-pin

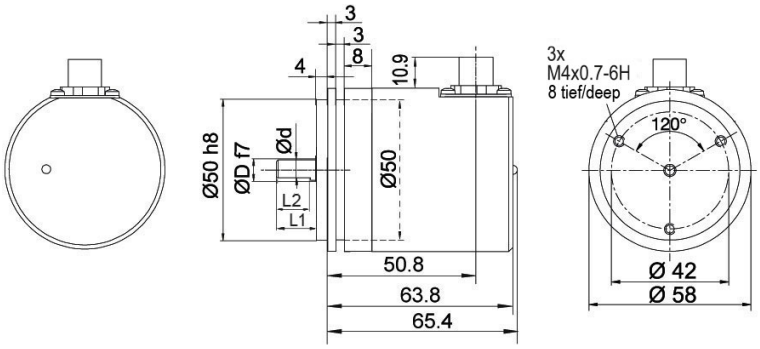

D = 6, L1 = 12, d = 5.3, L2 = 10
D = 8, L1 = 19, d = 7.5, L2 = 15
D = 10, L1 = 20, d = 9, L2 = 15
D = 3/8", L1 = 20, d = 8.3, L2 = 10

Option AIX:
D = 6, L1 = 10, d = 5.3, L2 = 8

Description

CC5 radial, 5-pin, shield connected to encoder housing

Assignments	
	CC5
	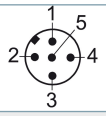
(+) Vcc	2
GND	3
CANHigh	4
CANLow	5
CANGND shield	1

WDGA 58A CANopen LIFT, galv. isolation, with 2x M12x1, axial DB5

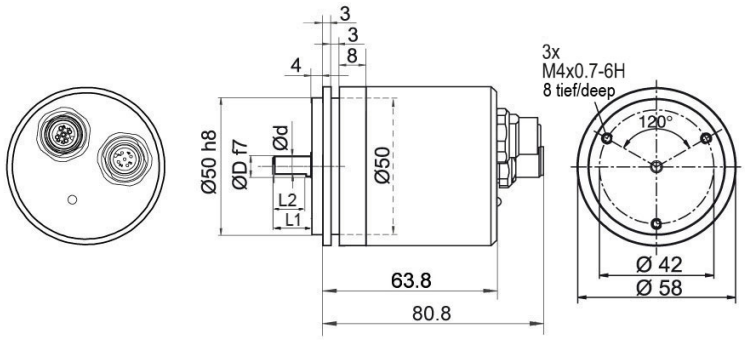

D = 6, L1 = 12, d = 5.3, L2 = 10
D = 8, L1 = 19, d = 7.5, L2 = 15
D = 10, L1 = 20, d = 9, L2 = 15
D = 3/8", L1 = 20, d = 8.3, L2 = 10

Option AIX:
D = 6, L1 = 10, d = 5.3, L2 = 8

Description

DB5 axial, 5-pin, shield connected to encoder housing

Assignments	
	DB5
	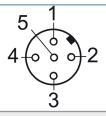
Female connector	M12x1, 5-pin
(+) Vcc	2
GND	3
CANHigh	4
CANLow	5
CANGND shield	1

Assignments	
	DB5
	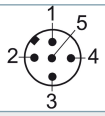
Connector	M12x1, 5-pin
(+) Vcc	2
GND	3
CANHigh	4
CANLow	5
CANGND shield	1

WDGA 58A CANopen LIFT, galv. isolation, cable connection, L2 axial with 2 m cable

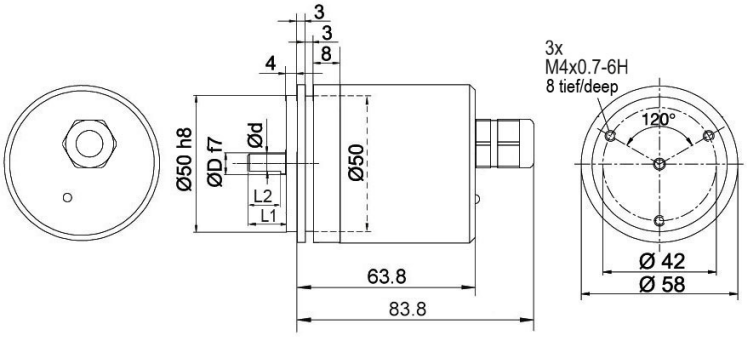

D = 6, L1 = 12, d = 5.3, L2 = 10
D = 8, L1 = 19, d = 7.5, L2 = 15
D = 10, L1 = 20, d = 9, L2 = 15
D = 3/8", L1 = 20, d = 8.3, L2 = 10

Option AIX:
D = 6, L1 = 10, d = 5.3, L2 = 8

Description

L2 axial, shield connected to encoder housing

Assignments	
	L2
(+) Vcc	BN
GND	WH
CANHigh	GN
CANLow	YE
CANGND shield	shield

WDGA 58A CANopen LIFT, galv. isolation, cable connection, L3 radial with 2 m cable

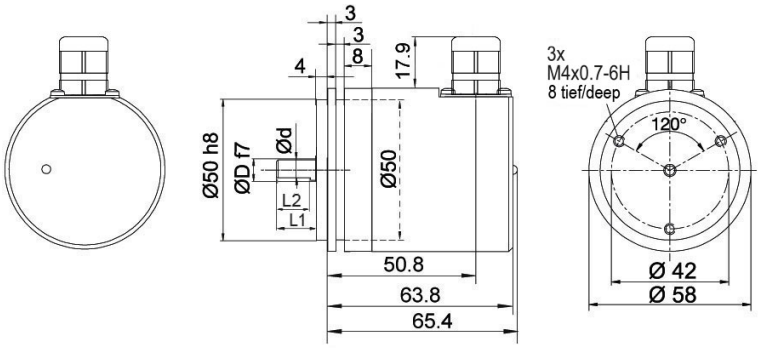

D = 6, L1 = 12, d = 5.3, L2 = 10
D = 8, L1 = 19, d = 7.5, L2 = 15
D = 10, L1 = 20, d = 9, L2 = 15
D = 3/8", L1 = 20, d = 8.3, L2 = 10

Option AIX:
D = 6, L1 = 10, d = 5.3, L2 = 8

Description

L3 radial, shield connected to encoder housing

Assignments	
	L3
(+) Vcc	BN
GND	WH
CANHigh	GN
CANLow	YE
CANGND shield	shield

Options

Shafts sealed to IP67, only with shaft Ø 10 mm shaft	Order key
The encoder WDG 58A CANopen LIFT galv. isolation can be supplied in a full IP67 version. Max. RPM: 3500 min'-1 Permitted Shaft-Loading: axial 100 N; radial 110 N Starting-torque: approx. 4 Ncm at ambient temperature	**AAO**

120 Ohm terminating resistor	Order key
The encoder WDGA 58A CANopen LIFT galv. is also available with fixed 120 Ohm terminating resistor.	**AEO**

Shaft length 10 mm (Ø 6 mm)	Order key
The encoder WDGA 58A CANopen LIFT galv. shaft: Ø 6 mm is also available with a shortened shaft L = 10 mm.	**AIX**

Example Order No.	Type		Your encoder
WDGA 58A	WDGA 58A		WDGA 58A
	Shaft	**Order key**	
06	Ø 6 mm Attention: No option AAO = full IP67 version	06	
	Ø 8 mm Attention: No option AAO = full IP67 version	08	
	Ø 10 mm	10	
	Ø 9.525 mm Ø 3/8" Attention: No option AAO = full IP67 version	4Z	
	Single-turn Resolution	**Order key**	
12	Single-turn resolution 1 bit up to 16 bit: (e. G. 12 bit)	12	
	Multi-turn Resolution	**Order key**	
18	Multi-turn resolution 1 bit up to 32 bit: (e. G. 18 bit) (Single-turn + Multi-turn max. 32 bit)	18	
	Data protocol	**Order key**	
CL	CANopen LIFT (galv. isolation)	CL	CL
	Software	**Order key**	
A	up to date release	A	A
	Code	**Order key**	
B	binary	B	B
	Power supply	**Order key**	
0	10 V up to 32 V (standard)	0	0
	Galvanic isolation	**Order key**	
1	yes	1	1
	Electrical connections	**Order key**	
CB5	**Cable:**		
	axial, shield connected to encoder housing, with 2 m cable	L2	
	radial, shield connected to encoder housing, with 2 m cable	L3	
	Connector:		
	sensor-connector, M12x1, 5-pin, axial, shield connected to encoder housing	CB5	
	sensor-connector, M12x1, 5-pin, radial, shield connected to encoder housing	CC5	
	sensor-connector/female connector, 2x M12x1, 5-pin, axial, shield connected to encoder housing	DB5	
	Options	**Order key**	
	Shafts sealed to IP67, only with shaft Ø 10 mm shaft	AAO	
	120 Ohm terminating resistor	AEO	
	Shaft length 10 mm (Ø 6 mm)	AIX	
	Without option	Empty	

Example Order No.	WDGA 58A	06	12	18	CL	A	B	0	1	CB5		
	WDGA 58A				CL	A	B	0	1			**Your encoder**

For further information please contact our local distributor.
Here you find a list of our distributors worldwide.
https://www.wachendorff-automation.com/contact-sales-en/

Wachendorff Automation GmbH & Co. KG
Industriestrasse 7 • 65366 Geisenheim
Germany

Phone: +49 67 22 / 99 65 25
E-Mail: wdg@wachendorff.de
www.wachendorff-automation.de