WACHENDORFF
The Encoder Experts

Online Data sheet

Encoder WDGA 58E SAE J1939 galv. isolation

www.wachendorff-automation.com/wdga58esaej1939galv

Wachendorff Automation

... systems and encoders

- Complete systems
- Industrial rugged encoders to suit your application
- Standard range and customer versions
- Maximum permissible loads
- 48-hour express production
- Made in Germany
- Worldwide distributor network

IndustrieROBUST

Encoder WDGA 58E absolute CAN SAE J1939, galv. isolation, with EnDra®- Technology

Illustration similar

EnDra® Technologie

SAE J1939

- EnDra® Technology:
- CAN SAE J1939 protocol
- Galvanic isolaltion
- Single-turn/Multi-turn (16 bit / 32 bit))
- Forward-looking technology with 32 Bit processor
- 2-colour-LED as indicator for operating condition

www.wachendorff-automation.com/wdga58esaej1939galv

Mechanical Data	
Housing	
Flange	hollow shaft (blind-bored)
Flange material	aluminum
Housing cap	steel case chrome-plated, magnetic shielding
Torque supports	incl. 1 torque support WDGDS10019
- 1. Spring plate compensation	axial: ±1.2 mm [0.0472"], radial: ±0.2 mm [0.0079"]
- Max. operating speed	6000 rpm up to max. protection rating +80 °C
Housing	Ø 58 mm [Ø 2.283"]
Shaft(s)	
Shaft material	stainless steel
Starting torque	approx. 1.6 Ncm at ambient temperature, approx. 2.266 in-ozf at ambient temperature
Fixing	permanently attached clambing ring
Shaft	Ø 6 mm [Ø 0.236"]
Advice	with adapter sleeve
Shaft length	L: 17 mm [0.669"]
Insertion depth min.	10 mm
Insertion depth max.	19 mm
Max. Permissible shaft loading radial	80 N
Max. Permissible shaft loading axial	50 N
Shaft	Ø 6.35 mm [Ø 1/4"] Order No: 2Z , Ø 1/4"
Advice	with adapter sleeve
Shaft length	L: 17 mm [0.669"], L: 0.669"
Insertion depth min.	10 mm, 0.394 in
Insertion depth max.	19 mm, 0.748 in
Max. Permissible shaft loading radial	80 N, 8.157 kp
Max. Permissible shaft loading axial	50 N, 5.098 kp
Shaft	Ø 7 mm [Ø 0.276"]
Advice	with adapter sleeve
Shaft length	L: 17 mm [0.669"]
Insertion depth min.	10 mm
Insertion depth max.	19 mm
Max. Permissible shaft loading radial	80 N
Max. Permissible shaft loading axial	50 N
Shaft	Ø 8 mm [Ø 0.315"]
Advice	with adapter sleeve
Shaft length	L: 17 mm [0.669"]
Insertion depth min.	10 mm
Insertion depth max.	19 mm
Max. Permissible shaft loading radial	80 N
Max. Permissible shaft loading axial	50 N
Shaft	Ø 9.525 mm [Ø 3/8"] Order No: 4Z, Ø 3/8"
Advice	with adapter sleeve
Shaft length	L: 17 mm [0.669"], L: 0.669"
Insertion depth min.	10 mm, 0.394 in
Insertion depth max.	19 mm, 0.748 in
Max. Permissible shaft loading radial	80 N, 8.157 kp
Max. Permissible shaft loading axial	50 N, 5.098 kp
Shaft	Ø 10 mm [Ø 0.394"]
Advice	with adapter sleeve
Shaft length	L: 17 mm [0.669"]
Insertion depth min.	10 mm
Insertion depth max.	19 mm
Max. Permissible shaft loading radial	80 N
Max. Permissible shaft loading axial	50 N
Shaft	Ø 12 mm [Ø 0.472"]
Shaft length	L: 17 mm [0.669"]
Insertion depth min.	10 mm
Insertion depth max.	19 mm
Max. Permissible shaft loading radial	80 N
Max. Permissible shaft loading axial	50 N
Shaft	Ø 14 mm [Ø 0.551"]
Shaft length	L: 17 mm [0.669"]
Insertion depth min.	10 mm
Insertion depth max.	19 mm

Max. Permissible shaft loading radial	80 N
Max. Permissible shaft loading axial	50 N

Shaft	Ø 15 mm [Ø 0.591"]
Shaft length	L: 17 mm [0.669"]
Insertion depth min.	10 mm
Insertion depth max.	19 mm
Max. Permissible shaft loading radial	80 N
Max. Permissible shaft loading axial	50 N

Bearings	
Bearings type	2 precision ball bearings
Nominale service life	1 x 10'9 revs. at 100 % rated shaft load 1 x 10'10 revs. at 40 % rated shaft load 1 x 10'11 revs. at 20 % rated shaft load
Max. operating speed	6000 rpm

Electrical Data	
Power supply/Current consumption	10 VDC up to 32 VDC: typ. 100 mA
Power consumption	max. 1 W
Operating principle	magnetic

Sensor data	
Single-turn technology	innovative hall sensor technology
Single-turn resolution	65.536 steps/360° (16 bit)
Single-turn accuracy	± 0.0878° (≤ 12 bit)
Single-turn repeat accuracy	± 0.0878° (≤ 12 bit)
Internal cycle time	≤ 600 µs
Multi-turn technology	patented EnDra® technology no battery, no gear.
Multi-turn resolution	up to 32 bit

Environmental data	
ESD (DIN EN 61000-4-2):	8 kV
Burst (DIN EN 61000-4-4):	2 kV
includes EMC:	DIN EN 61000-6-2 DIN EN 61000-6-3 DIN EN 61326-1
Vibration: (DIN EN 60068-2-6)	50 m/s² (10 Hz up to 2000 Hz)
Shock: (DIN EN 60068-2-27)	5000 m/s² (6 ms)
Electrial Safety:	according DIN VDE 0160
Turn on time:	<1,5 s

Duty information	
Customs tariff number:	90318020
Country of origin:	Germany

Interface	
Interface:	**CAN**
CAN physical layer:	ISO 11898 (High Speed CAN)
Protocol:	ISO 11898 (High Speed CAN)
Baud rate:	Auto-Baud-Detection
Standard Preset configuration:	(other configurations on request)

Direction of counting:	(View from shaft end) ccw
ECU-adress:	0x 0A
Process data Identifier:	0x18FF000A
PGN:	0xFF00
Process data mapping:	Byte 0-3 32 Bit Position Value Byte 4 8 Bit Error Register PDU timer and Position Preset can be adjusted by PGN configration 0xEF00 (Prop. A)
PDU - Time:	50 ms (default)
Configuration - PGN:	0x EF 00 (Prop.A)
Byte 0:	0x 01
Byte 1:	0x FF
Byte 2:	PDU time LSB
Byte 3:	PDU time MSB
Byte 4:	Preset LSB
Byte 5, 6:	Preset
Byte 7:	Preset MSB

General Data	
Weight	approx. 410 g, approx. 14.462 oz
Connections	cable or connector outlet
Protection rating (EN 60529)	Housing: IP65, IP67; shaft sealed: IP65
Operating temperature	-40 °C up to +85 °C, -40 °F up to +176 °F
Storage temperature	-40 °C up to +100 °C, -40 °F up to +212 °F

More Information
General technical data and safety instructions **http://www.wachendorff-automation.com/gtd**
Options **http://www.wachendorff-automation.com/acc**

WDGA 58E CAN SAE J1939 galv. isolation, with M12x1, axial CB5, 5-polig

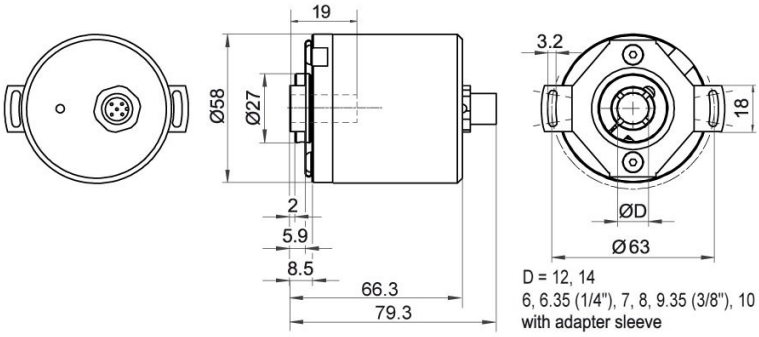

Description

CB5 axial, 5-pin, shield connected to encoder housing

Assignments	
	CB5
	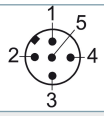
(+) Vcc	2
GND	3
CANHigh	4
CANLow	5
CANGND shield	1

WDGA 58E CAN SAE J1939 galv. getrennt, mit M12x1, radial CC5, 5-polig

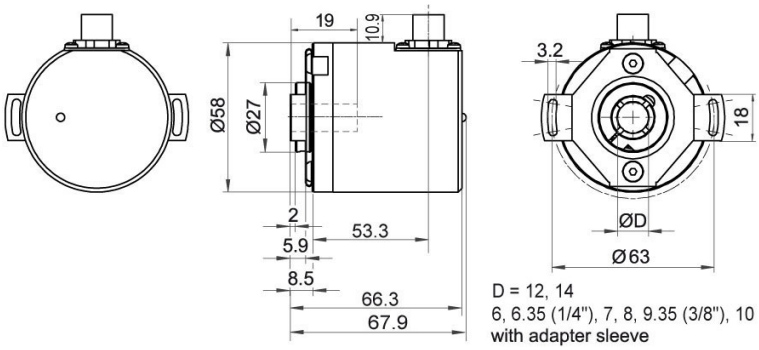

Description

CC5 radial, 5-pin, shield connected to encoder housing

Assignments	
	CC5
	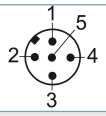
(+) Vcc	2
GND	3
CANHigh	4
CANLow	5
CANGND shield	1

WDGA 58E CAN SAE J1939 galv. getrennt, mit 2x M12x1, axial DB5, 5-polig

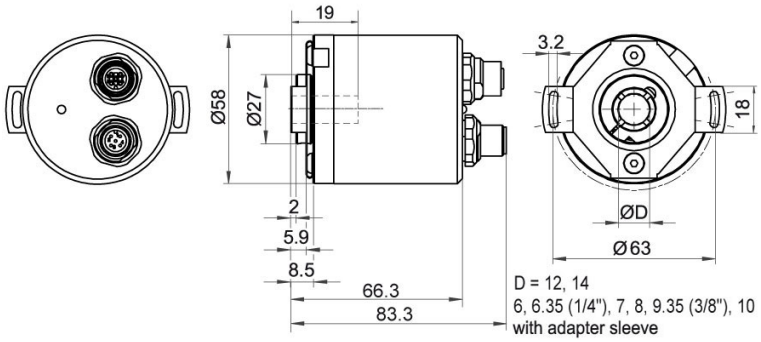

Description

DB5 axial, 5-pin, shield connected to encoder housing

Assignments	
	DB5
	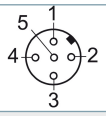
Female connector	M12x1, 5-pin
(+) Vcc	2
GND	3
CANHigh	4
CANLow	5
CANGND shield	1

Assignments	
	DB5
	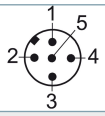
Connector	M12x1, 5-pin
(+) Vcc	2
GND	3
CANHigh	4
CANLow	5
CANGND shield	1

WDGA 58E CAN SAE J1939, galv. isolation, cable connection, L2 axial with 2 m cable

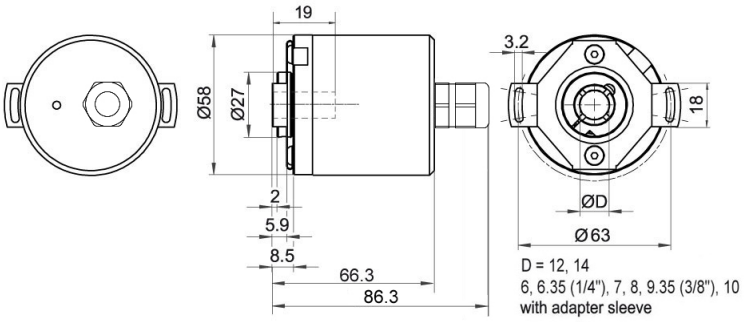

Description

L2 axial, shield connected to encoder housing

Assignments	
	L2
(+) Vcc	BN
GND	WH
CANHigh	GN
CANLow	YE
CANGND shield	shield

WDGA 58E CAN SAE J1939, galv. getrennt, Kabel, L3 radial mit 2 m Kabel

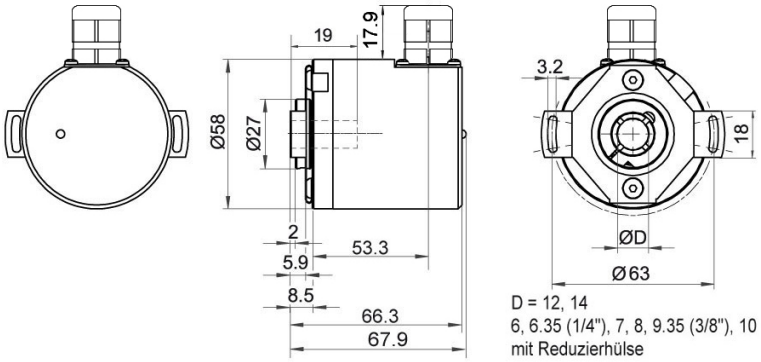

Description

L3 radial, shield connected to encoder housing

Assignments	
	L3
(+) Vcc	BN
GND	WH
CANHigh	GN
CANLow	YE
CANGND shield	shield

Options

120 Ohm terminating resistor	Order key
The encoder WDGA 58E CAN SAE J1939 galv. is also available with fixed 120 Ohm terminating resistor.	**AEO**

Example Order No.	Type		Your encoder
WDGA 58E	WDGA 58E		WDGA 58E
	Shaft	**Order key**	
12	Ø 6 mm [Ø 0.236"] with adapter sleeve	06	
	Ø 6.35 mm [Ø 1/4"] Order No: 2Z Ø 1/4" with adapter sleeve	2Z	
	Ø 7 mm [Ø 0.276"] with adapter sleeve	07	
	Ø 8 mm [Ø 0.315"] with adapter sleeve	08	
	Ø 9.525 mm [Ø 3/8"] Order No: 4Z Ø 3/8" with adapter sleeve	4Z	
	Ø 10 mm [Ø 0.394"] with adapter sleeve	10	
	Ø 12 mm [Ø 0.472"]	12	
	Ø 14 mm [Ø 0.551"]	14	
	Ø 15 mm [Ø 0.591"]	15	
	Single-turn Resolution	**Order key**	
12	Single-turn resolution max. 16 bit, recommended min. 6 bit (e. G. 12 bit)	12	
	Multi-turn Resolution	**Order key**	
18	Multi-turn up to 32 bit (e. G. 18 bit) (Single-turn + Multi-turn max. 32 bit) No Multi-turn: 00	18	
	Data protocol	**Order key**	
CJ	CAN SAE J1939 (galv. isolation)	CJ	
	Software	**Order key**	
A	up to date release	A	
	Code	**Order key**	
B	binary	B	
	Power supply	**Order key**	
0	10 V up to 32 V (standard)	0	
	Galvanic isolation	**Order key**	
1	yes	1	
	Electrical connections	**Order key**	
CB5	**Cable:**		
	axial, shield connected to encoder housing, with 2 m cable	L2	
	radial, shield connected to encoder housing, with 2 m cable	L3	
	Connector:		
	sensor-connector, M12x1, 5-pin, axial, shield connected to encoder housing	CB5	
	sensor-connector, M12x1, 5-pin, radial, shield connected to encoder housing	CC5	
	sensor-connector/female connector, 2x M12x1, 5-pin, axial, shield connected to encoder housing	DB5	
	Options	**Order key**	
	Without option	Empty	
	120 Ohm terminating resistor	AEO	

Example Order No.	WDGA 58E	12	12	18	CJ	A	B	0	1	CB5	
	WDGA 58E											Example Order No.

WACHENDORFF
The Encoder Experts
Authorized Distributor

For further information please contact our local distributor.
Here you find a list of our distributors worldwide.
https://www.wachendorff-automation.com/contact-sales-en/

WACHENDORFF

Wachendorff Automation GmbH & Co. KG
Industriestrasse 7 • 65366 Geisenheim
Germany

Phone: +49 67 22 / 99 65 25
E-Mail: wdg@wachendorff.de
www.wachendorff-automation.de