Wachendorff Automation GmbH & Co. KG
Industriestraße 7 • D-65366 Geisenheim
Tel.: +49 (0) 67 22 / 99 65 -25 • Fax: +49 (0) 67 22 / 99 65 -70
E-Mail: wdg@wachendorff.de • www.wachendorff-automation.com

Encoder WDG 58E

c UL us LISTED

NEW!
15 mm Hollow bore (blind) encoder

- Rugged industrial standard hollow bore (blind) encoder
- Up to 25000 PPR by use of high grad electronics
- Maximum mechanical and electrical safety
- High protection accordingt IP67, shaft sealed to IP65, high noise immunity
- End-Hollow-Shaft
- Full connection protection with 10 VDC up to 30 VDC
- With light reserve warning
- Optional: -40 °C up to +80 °C

www.wachendorff-automation.com/wdg58e

Available PPR up to 25000 PPR

Mechanical Data

Housing	
- Flange:	Aluminium
- Cap:	Aluminium, powder coated
- Torque Support:	
1. Spring plate	Incl. 1 spring plate WDGDS10001
Compensation:	axial: max. 1.5 mm, radial: max. 0.1 mm
Max. operating speed:	6000 rpm up to max. protection rating +60 °C
2. Cylinder pin	(Accessories)
Compensation:	axial: max. 1 mm, radial: max. 0.3 mm
Max. operating speed:	3000 rpm

Hollow bore (blind)	
- Material:	stainless steel
- Diameter:	8, 10, 12 or 15 mm, H7
- Permitted load on shaft end:	max. 80 N radial max. 60 N axial
- Starting torque:	approx. 1.6 Ncm at ambient temperature
Attachment:	permanently attached clambing ring

Bearings	
- Type:	2 precision ball bearings
- Service life:	1 x 10^9 revs. at 100 % rated shaft load 1 x 10^{10} revs. at 40 % rated shaft load 1 x 10^{11} revs. at 20 % rated shaft load
Weight:	approx. 220 g
Connections:	cable or connector, radial
Protection rating: (EN 60529)	IP67, shaft sealed to IP65
Operating temperature:	-20 °C up to +80 °C, 1 Vss: -10 °C up to +70 °C
Storage temperature:	-30 °C up to +80 °C

Machinery Directive: basic data safety integrity level

$MTTF_d$:	200 a
Mission time (T_M):	25 a
Nominale service life ($L_{10}h$):	1 x 10^{11} revs. at 6000 rpm and 20 % rated shaft load
Diagnostic coverage (DC):	0 %

Electrical Data

Power supply/ Open circuit current consuption:	4.75 VDC up to 5.5 VDC:	max. 100 mA
	5 VDC up to 30 VDC:	max. 70 mA
	10 VDC up to 30 VDC:	max. 100 mA
Output circuit:	TTL, RS422 compatible, HTL, 1 Vss Sin/Cos	
Pulse frequency:	TTL ≤ 5000 PPR:	max. 200 kHz
	HTL ≤ 5000 PPR:	max. 200 kHz
	TTL > 5000 PPR:	max. 2 MHz
	HTL > 5000 PPR:	max. 600 kHz
	1 Vss Sin/Cos:	max. 100 kHz
Channels:	AB, ABN and inverted signals	
Load:	max. 40 mA / channel, @ 1 Vss Sin/Cos: 120 Ohm termination	
Circuit protection:	circuit type F24, G24, H24, I24, P24, R24 only	
Accuracy:	Phase offset:	90° ± max. 7.5 % of the pulse length
	pulse-/pause-ratio:	50 % ± max. 7 %

Further technical information on:
www.wachendorff-automation.com/gtd
Matching accessories on: www.wachendorff-automation.com/acs

Cable connection K3, L3 with 2 m cable

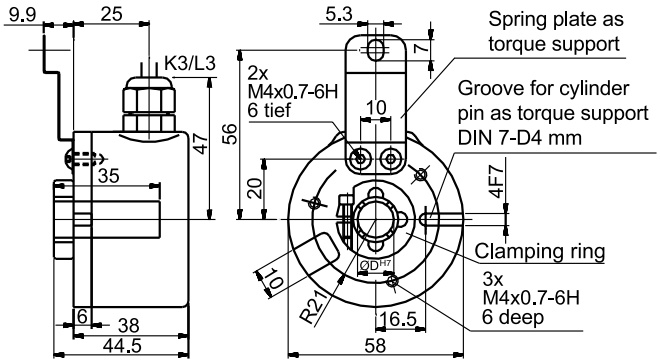

Connector (M16x0.75) SH, 5-, 6-, 8-, 12-pin, S3, 7-pin

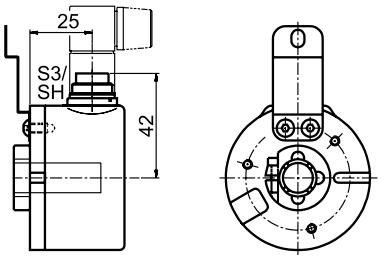

Connector (M23) S5, S5R, 12-pin

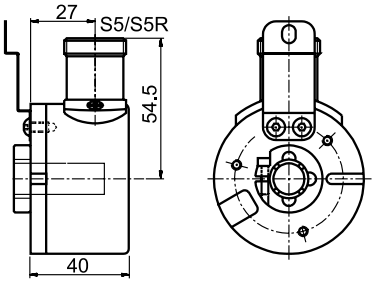

WACHENDORFF
Automation GmbH & Co. KG

Sensor-connector (M12x1) SC, 4-, 5-, 8-, 12-pin

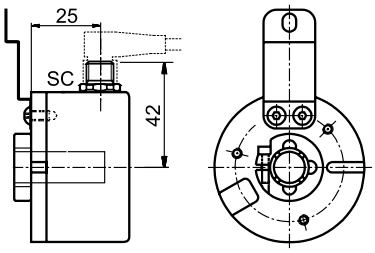

All dimensional specifications in mm.

Options:

Low-temperature:
The encoder WDG 58E with the output circuit types F24, G24, H24, I24, P24, R24, F05, G05, I05, P05, 245 and 645 is also available with the extended temperature range -40 °C up to +80 °C (measured at the flange). When ordering please add the suffix code - ACA.

Cable length:
The encoder WDG 58E can be supplied with more than 2 m cable. The maximum cable length depends on the supply voltage and the frequency; see „General Technical Data“:
www.wachendorff-automation.com/gtd
Please extend the standard order code with a three figure number, specifying the cable length in decimetres.
Example: 3 m cable = 030

Ordering information: **Please see our general technical data at: www.wachendorff-automation.com/gtd**

Output circuit:

Resolution PPR	Power supply VDC	Output circuit		Light reserve warning	Order Key
up to 1024	5 - 30	⊓⊔	HTL	-	H30
			HTL inverted	-	R30
up to 5000	4,75 - 5,5	⊓⊔	TTL	●	G05
				-	H05
			TTL, RS422 comp., inverted	●	I05
				-	R05
	10 - 30	⊓⊔	HTL	●	G24
				-	H24
			HTL inverted	●	I24
				-	R24
			TTL, RS422 comp., inv.	●	245
10000 up to 25000	4,75 - 5,5	⊓⊔	TTL	-	F05
			TTL, RS422 comp., inv.	-	P05
	10 - 30	⊓⊔	HTL	-	F24
			HTL inverted	-	P24
			TTL, RS422 comp., inv.	-	645
1024 2048	4,75 - 5,5	∼	1 Vss Sin/Cos	-	SIN

Channels: AB, ABN (SIN: AB)

Pulses per revolution PPR:
4, 6, 10, 32, 36, 50, 60, 64, 100, 120, 125, 127, 150, 180, 200, 216, 240, 250, 254, 256, 300, 314, 360, 400, 500, 512, 600, 625, 720, 750, 768, 800, 810, 900, 1000, 1024, 1200, 1250, 1270, 1440, 1500, 1800, 2000, 2048, 2400, 2500, 3000, 3600, 4000, 4096, 5000, 10000, 12500, 20000, 25000.

1 Vss Sin/Cos 1024 PPR and 2048 PPR only
Other PPRs on request

Bore size: 8, 10, 12, 15
Other diameters on request

Electrical connections:

Order key	Outgoing	Description	$\overline{\text{ABN}}$ inv.
Cable: (Length 2 m standard)			
K3	radial	shield not connected	●
L3		shield connected to encoder housing	●
Connector:			
SH5	radial	5-pin, connector	-
SH6	radial	6-pin, connector	-
SH8	radial	8-pin, connector	●
SH12	radial	12-pin, connector	●
S3	radial	7-pin, connector	-
S5/ S5R	radial	12-pin, connector (R = clockwise pin count)	●
SC4	radial	4-pin, M12-sensor-connector	-
SC5	radial	5-pin, M12-sensor-connector	-
SC8	radial	8-pin, M12-sensor-connector	●
SC12	radial	12-pin, M12-sensor-connector	●

Options:
Empty = Without option
ACA = Low-temperature -40 °C up to +80 °C
In decimetres = Cable length

Order No.:

Example	WDG 58E	10	1024	ABN	G24	K3	
Your encoder	WDG 58E						